VS-060 (Bottom Connector Panel, Communication Interface Flange-A)
410590-3580

Detailed drawing of end-effector mounting face

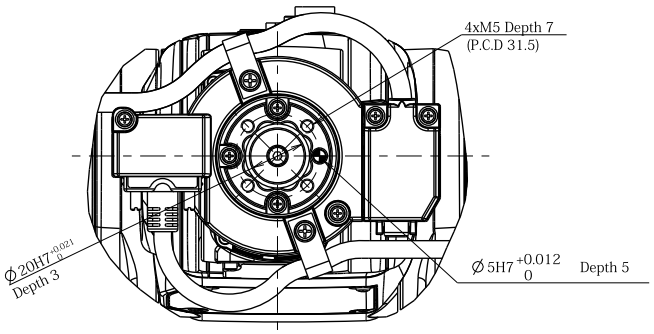

B

Detailed drawing of base mounting face

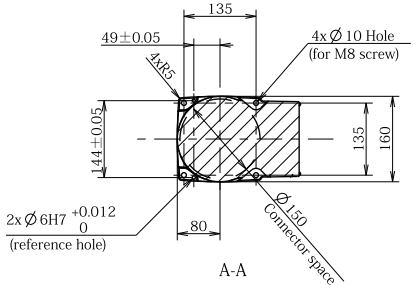

A-A

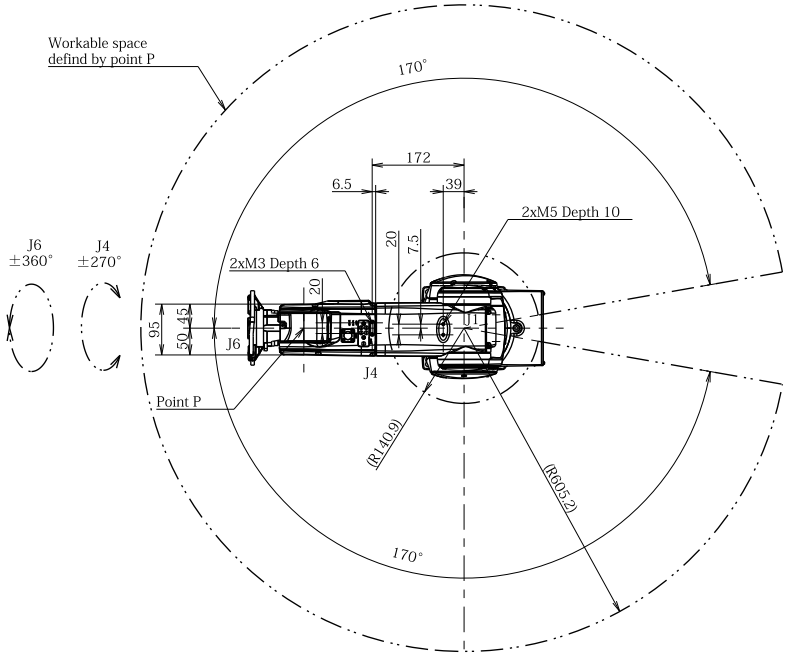

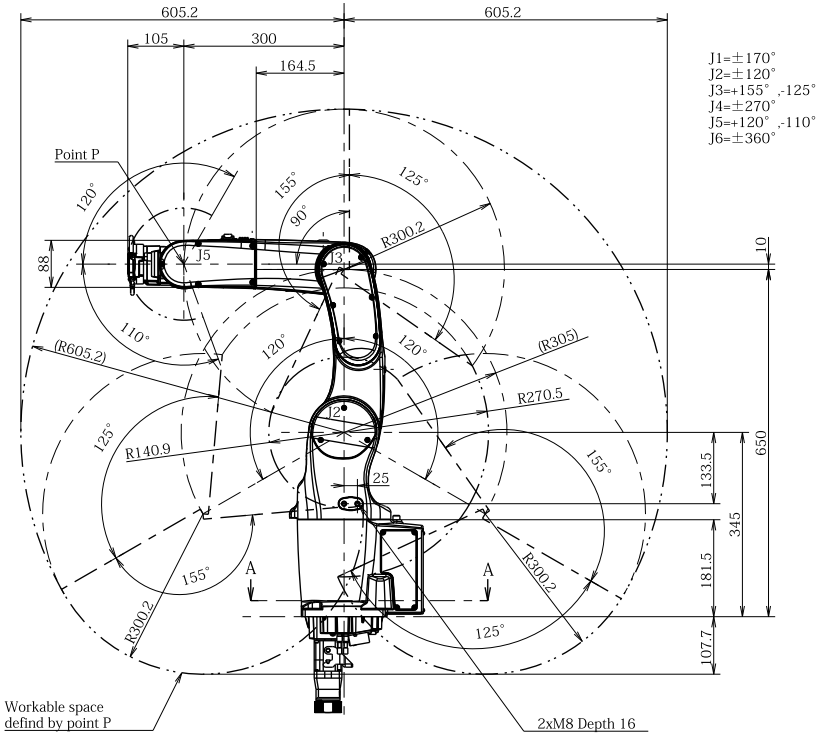

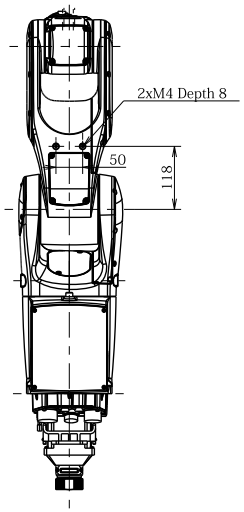

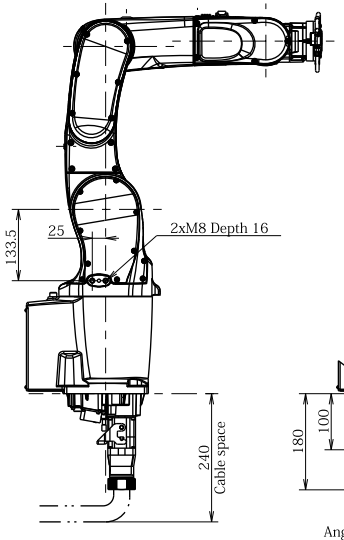

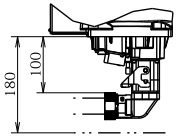
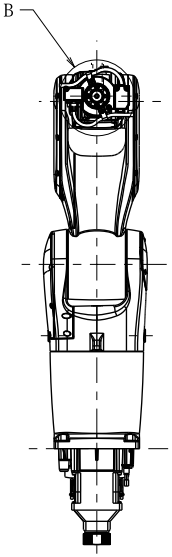
Cable space
Angle Connector Type